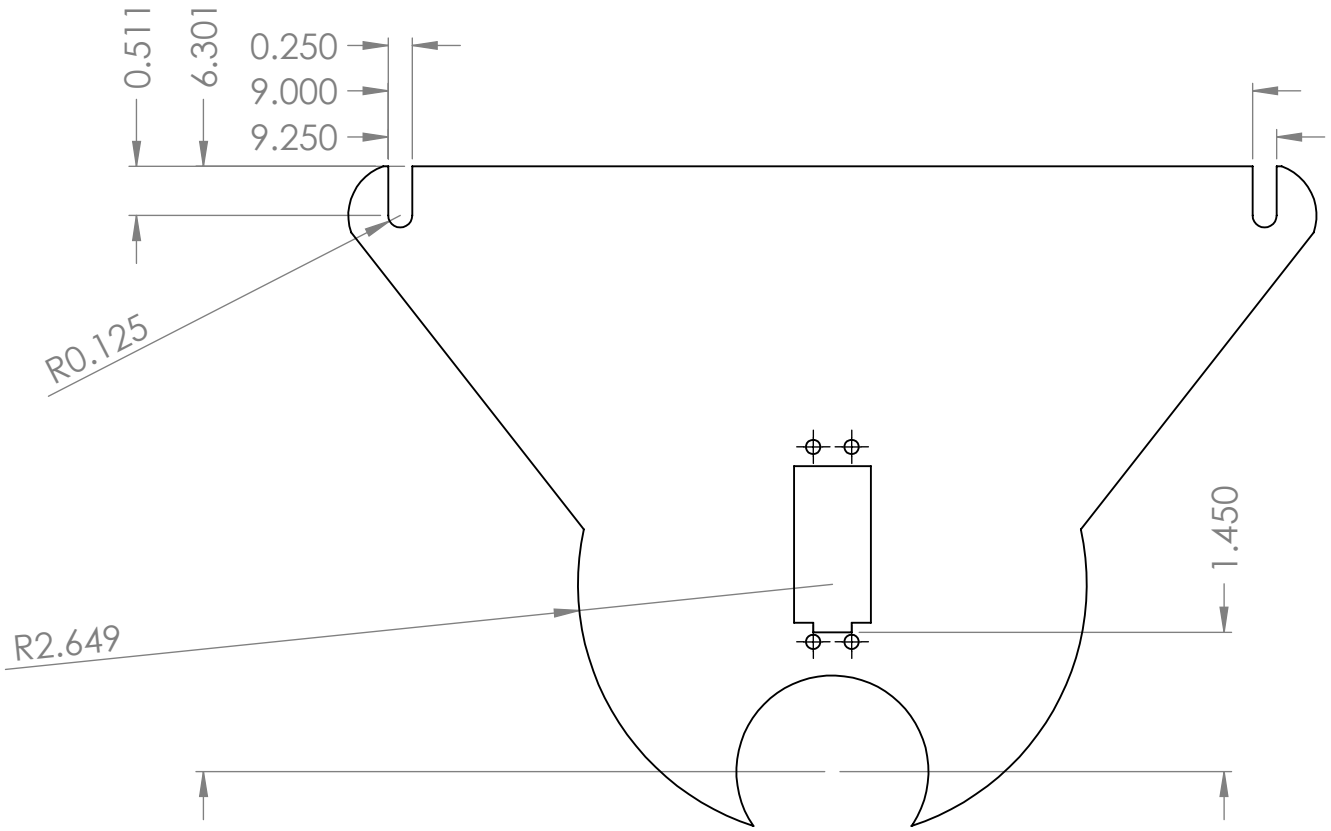

Part is symmetric. Servo dimesnions are typical. Dimensions that are not specified are arbitrary.

SolidWorks Student Edition.
For Academic Use Only.

UNLESS OTHERWISE SPECIFIED: DIMENSIONS ARE IN MILLIMETERS SURFACE FINISH: TOLERANCES: LINEAR: ANGULAR:	FINISH:				DEBUR AND BREAK SHARP EDGES	
	NAME	SIGNATURE	DATE			
DRAWN						
CHK'D						
APPV'D						
MFG						
Q.A				MATERIAL:		
				WEIGHT:		

DO NOT SCALE DRAWING | REVISION

Dustin Gerrard

TITLE:

CircuitMount

DWG NO. PartHBallHolder1 | A4

SCALE:1:5 | SHEET 1 OF 1